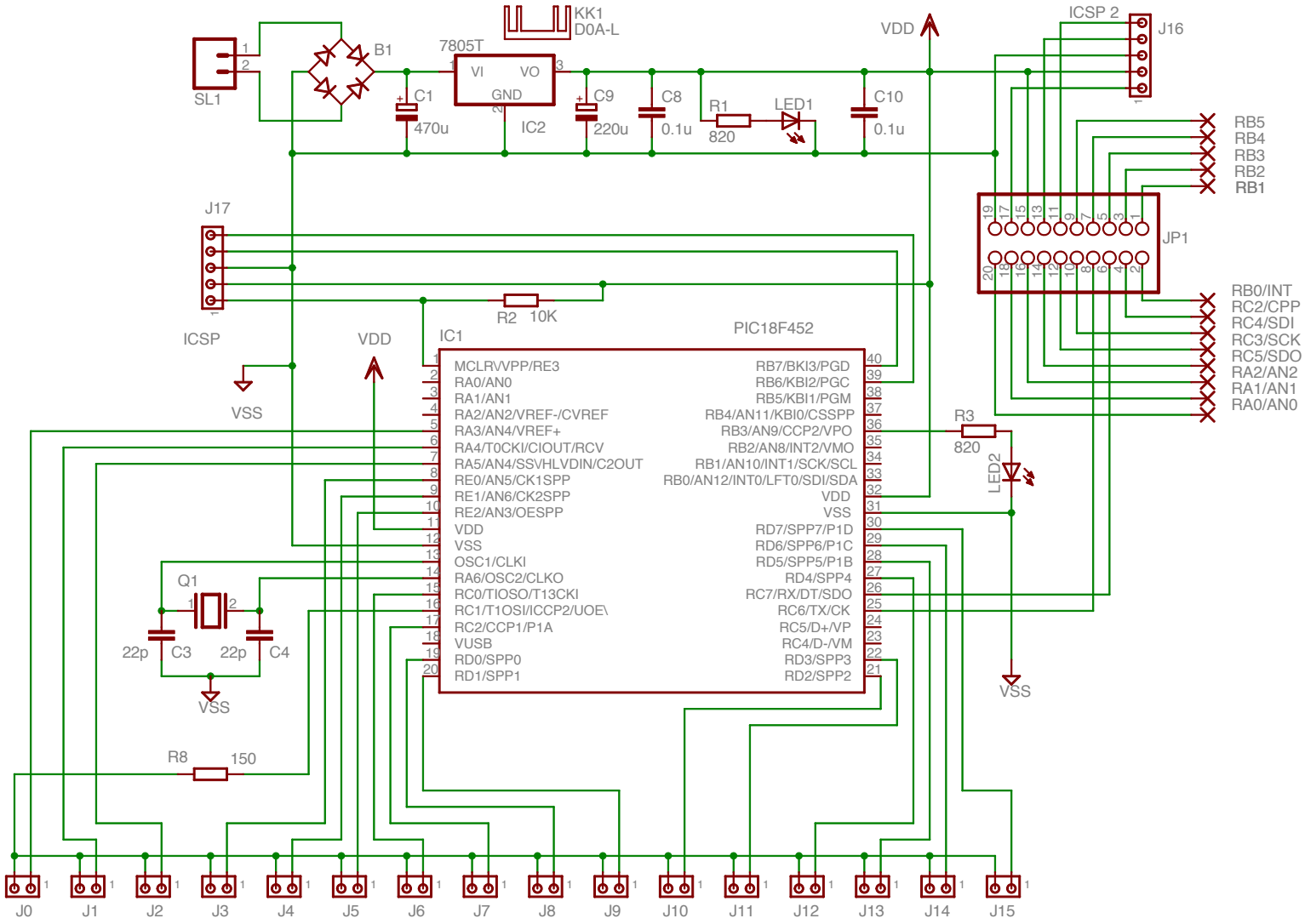
KK1
D0A-L
VDD
ICSP 2
J16
SL1
B1
7805T
VI
VO
GND
IC2
C1
470u
C9
220u
C8
0.1u
R1
820
LED1
C10
0.1u
RB5
RB4
RB3
RB2
RB1
J17
JP1
ICSP
R2
10K
VDD
VSS
IC1
PIC18F452
MCLR\VPP/RE3
RA0/AN0
RA1/AN1
RA2/AN2/VREF-/CVREF
RA3/AN4/VREF+
RA4/T0CKI/CIOUT/RCV
RA5/AN4/SSVHLVDIN/C2OUT
RE0/AN5/CK1SPP
RE1/AN6/CK2SPP
RE2/AN3/OESPP
VDD
VSS
OSC1/CLKI
RA6/OSC2/CLKO
RC0/TIOSO/T13CKI
RC1/T1OSI/ICCP2/UOE\
RC2/CCP1/P1A
VUSB
RD0/SPP0
RD1/SPP1
RB7/BKI3/PGD
RB6/KBI2/PGC
RB5/KBI1/PGM
RB4/AN11/KBI0/CSSPP
RB3/AN9/CCP2/VPO
RB2/AN8/INT2/VMO
RB1/AN10/INT1/SCK/SCL
RB0/AN12/INT0/LFT0/SDI/SDA
VDD
VSS
RD7/SPP7/P1D
RD6/SPP6/P1C
RD5/SPP5/P1B
RD4/SPP4
RC7/RX/DT/SDO
RC6/TX/CK
RC5/D+/VP
RC4/D-/VM
RD3/SPP3
RD2/SPP2
RB0/INT
RC2/CPP
RC4/SDI
RC3/SCK
RC5/SDO
RA2/AN2
RA1/AN1
RA0/AN0
R3
820
LED2
VSS
Q1
22p
C3
22p
C4
VSS
R8
150
J0
J1
J2
J3
J4
J5
J6
J7
J8
J9
J10
J11
J12
J13
J14
J15