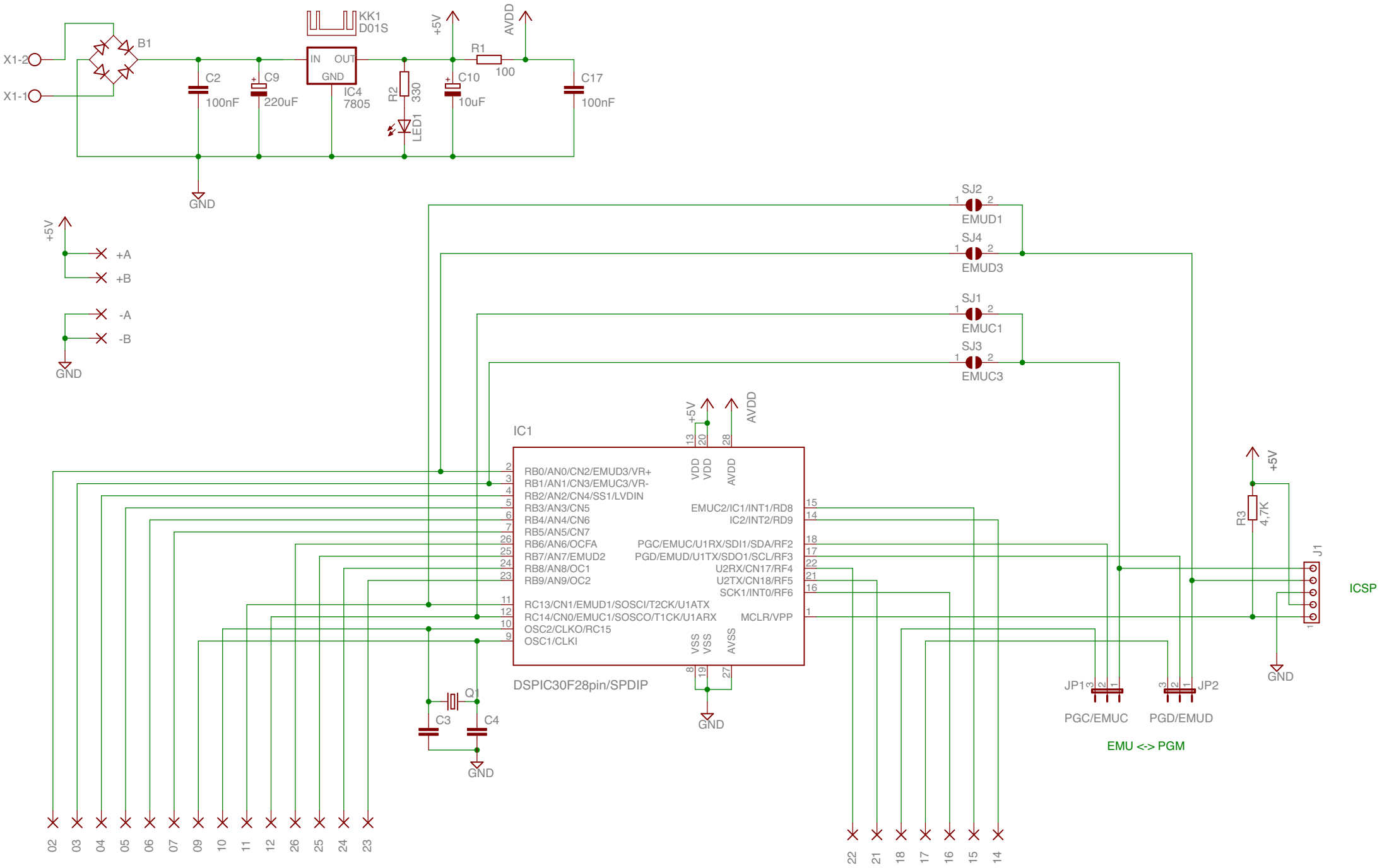
X1-2
X1-1
B1
C2
100nF
C9
220uF
KK1
D01S
IN
OUT
GND
IC4
7805
R2
330
LED1
+5V
C10
10uF
R1
100
AVDD
C17
100nF
GND
+5V
+A
+B
-A
-B
GND
SJ2
EMUD1
SJ4
EMUD3
SJ1
EMUC1
SJ3
EMUC3
IC1
+5V
AVDD
RB0/AN0/CN2/EMUD3/VR+
RB1/AN1/CN3/EMUC3/VR-
RB2/AN2/CN4/SS1/LVDIN
RB3/AN3/CN5
RB4/AN4/CN6
RB5/AN5/CN7
RB6/AN6/OCFA
RB7/AN7/EMUD2
RB8/AN8/OC1
RB9/AN9/OC2
RC13/CN1/EMUD1/SOSCI/T2CK/U1ATX
RC14/CN0/EMUC1/SOSCO/T1CK/U1ARX
OSC2/CLKO/RC15
OSC1/CLKI
VDD
VDD
AVDD
EMUC2/IC1/INT1/RD8
IC2/INT2/RD9
PGC/EMUC/U1RX/SDI1/SDA/RF2
PGD/EMUD/U1TX/SDO1/SCL/RF3
U2RX/CN17/RF4
U2TX/CN18/RF5
SCK1/INT0/RF6
MCLR/VPP
VSS
VSS
AVSS
DSPIC30F28pin/SPDIP
GND
Q1
C3
C4
GND
R3
4,7K
+5V
J1
ICSP
GND
JP1
JP2
PGC/EMUC
PGD/EMUD
EMU <-> PGM
02
03
04
05
06
07
09
10
11
12
26
25
24
23
22
21
18
17
16
15
14